Strut profile 45x45L

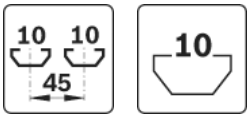

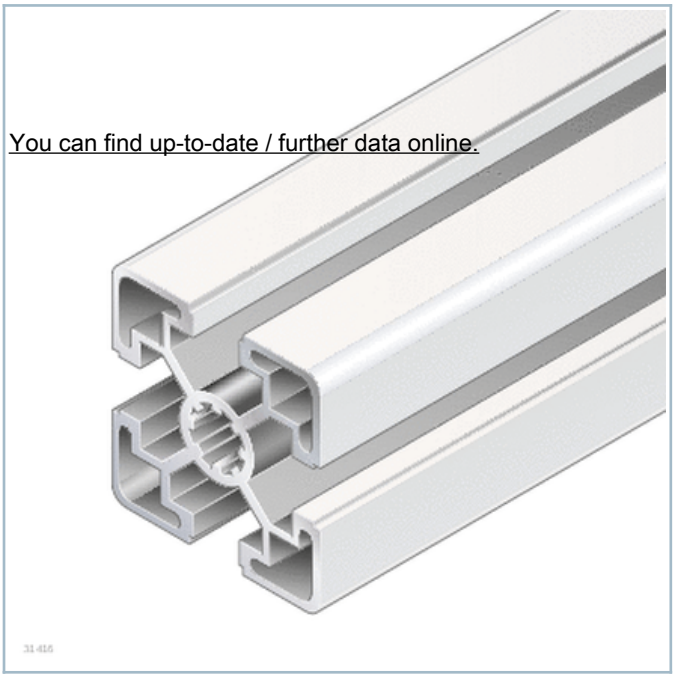

Assembly-Technology, PDF version, 2022-08-237, © Bosch Rexroth AG, subject to change.
Valid edition only on the Internet. Copies of any type are not subject to change.

Product description

Quick & Easy profile finishes

Introduction to strut profiles

Technical data

Quick & Easy profile finishes

Dimensions

Strut profile 45x45L

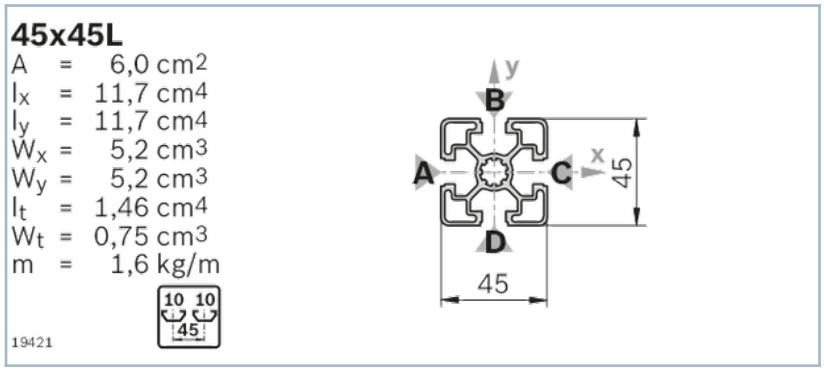

Cover cap 45x45

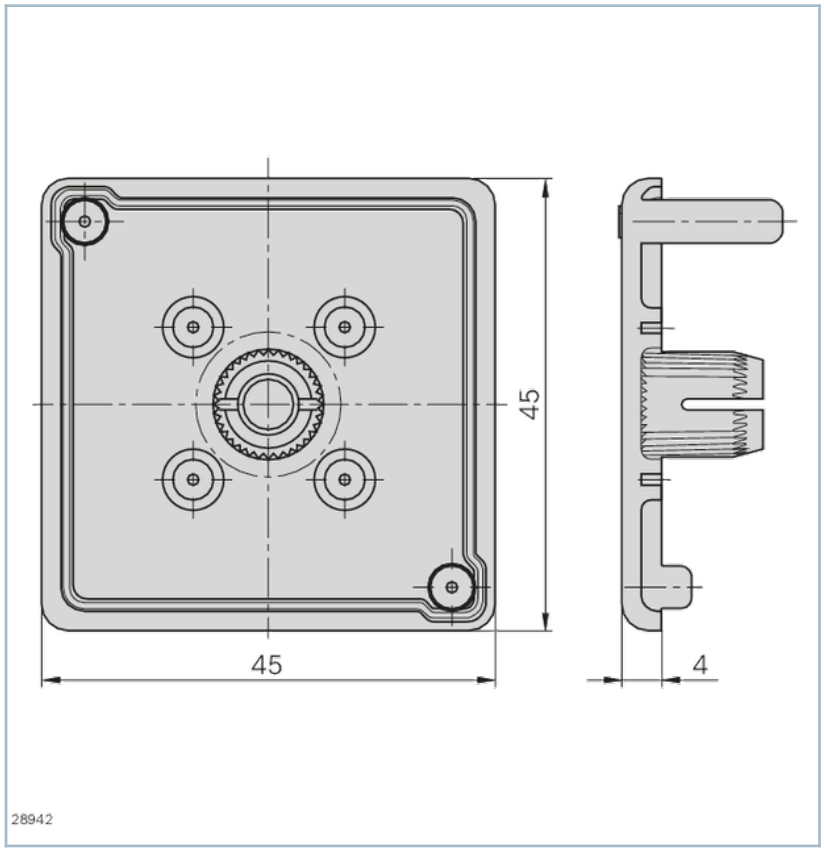

Ordering codes

The following cover caps with hole can be used:
Cover cap with hole 45x45, signal gray (1x)
Cover cap with hole 45x45, black (1x)
The following cover caps can be used:
Cover cap 45x45, signal gray (1x)
Cover cap 45x45, black (1x)

	L			ESD	No.
	mm				
Strut profile 45x45L	50 … 6070		1		3842992425
Strut profile 45x45L M12/-	60 … 6000		1		3842992426
Strut profile 45x45L M12/M12	110 … 6000		1		3842992427
Strut profile 45x45L M12/D17	90 … 6000		1		3842992960
Strut profile 45x45L D9,8/D9,8	80 … 6000		1		3842992967
Strut profile 45x45L D17/-	60 … 6000		1		3842992953
Strut profile 45x45L D17/D17	80 … 6000		1		3842992954
Strut profile 45x45L D17/D17V	80 … 6000		1		3842992956
Strut profile 45x45L, 20XL=6070mm	6070	20			3842553611
Strut profile 45x45L Q&E	50 … 6070		1		3842993737
Cover cap 45x45, signal gray			100		3842548752
Cover cap 45x45, black			20		3842548753
Cover cap with hole 45x45, signal gray			20		3842548796
Cap with hole 45x45, black			20		3842548797
Strut profile 45x45L	6070		1		3842553618

Quick&Easy profile finishes

Standard profile finishing Lmax = 6000 mm (note minimum length) [1)]		M12 / D9,8 / D17 / DB17 / F1 (A)
Customized profile finishes (L_{max} = 4900 mm) [2)]		DI / DIS / MT / MTS / MI / MIS / DG

1) For the specified slots

2) DG_{max} = 45°; L_{min1} / L_{min2} = 378 / 456 mm

Assembly-Technology, PDF version, 2022-08-237, © Bosch Rexroth AG, subject to change.
Valid edition only on the Internet. Copies of any type are not subject to change.